ATU-N7DDC, Version of the ATU-1Kw from eu2av.

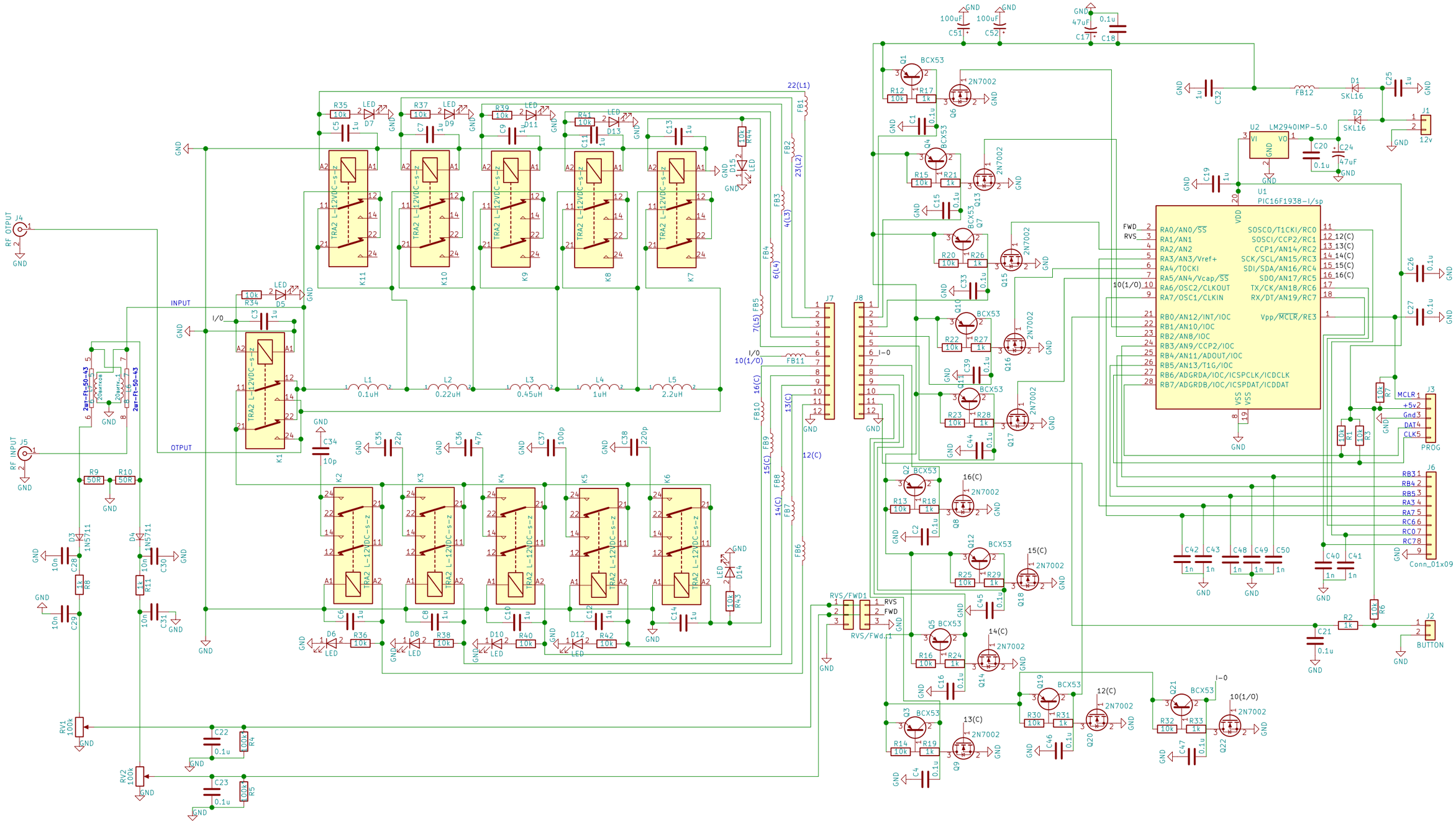

eu2av

Sheet: /
File: ATU-06-1.5Kw.sch

Title: 5x5.ATU-N7DDC, Version of the ATU-0.6-1Kw from eu2av.

Size: A3	Date: 2018-11-22	Rev:
KiCad E.D.A. kicad 4.0.7		Id: 1/1